KDS322191DBNL

Stainless Steel Self-Rimming Double Bowl Kitchen Sink, 1 Hole, (L)31-1/2" X (W)20-1/2" X (D)9-3/16"

Depth	SS Type	Thickness
9-3/16"	18-10 304 Grade	1.05mm(18G)

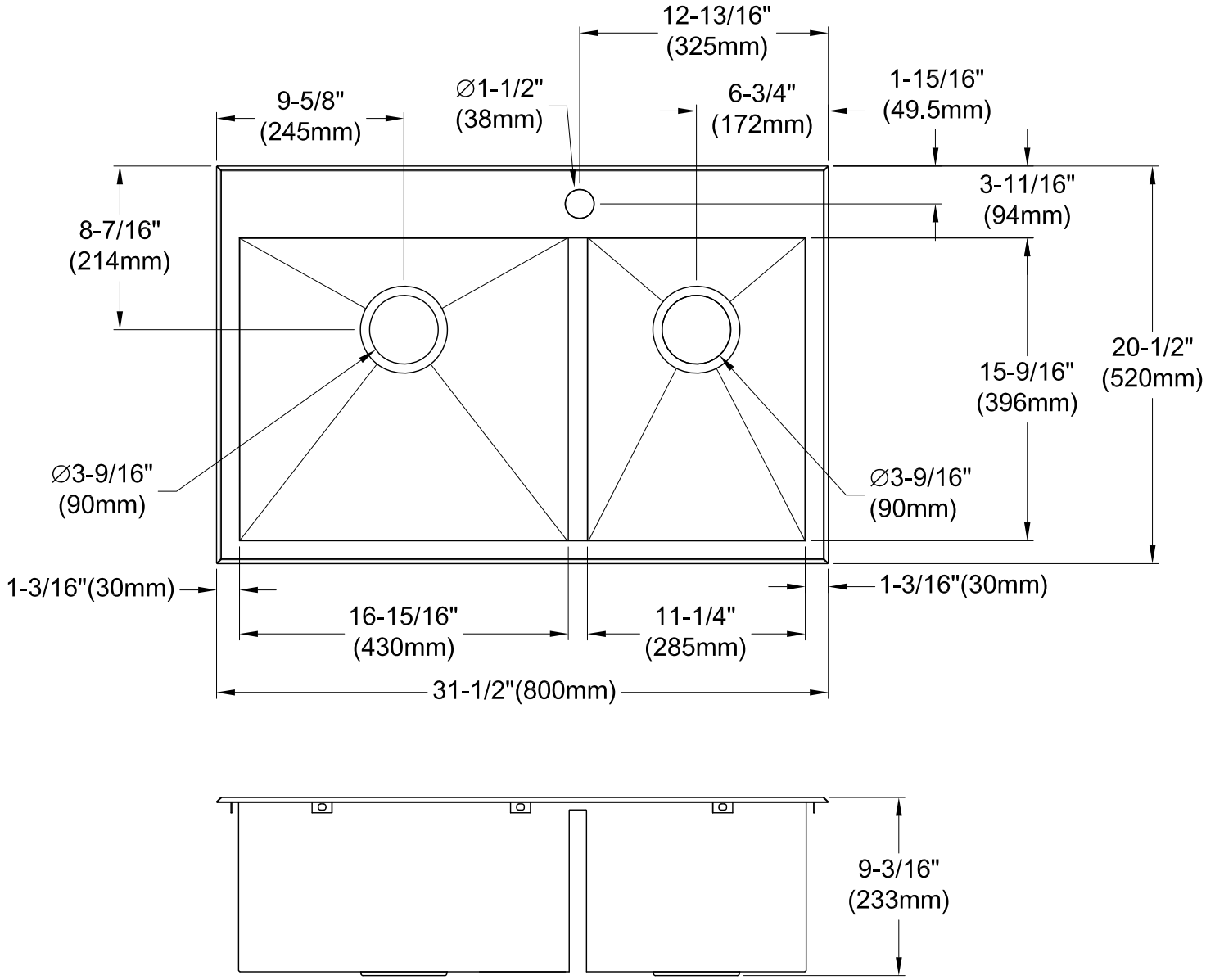

Ref# KDS322191DBNL | 2018-08-A